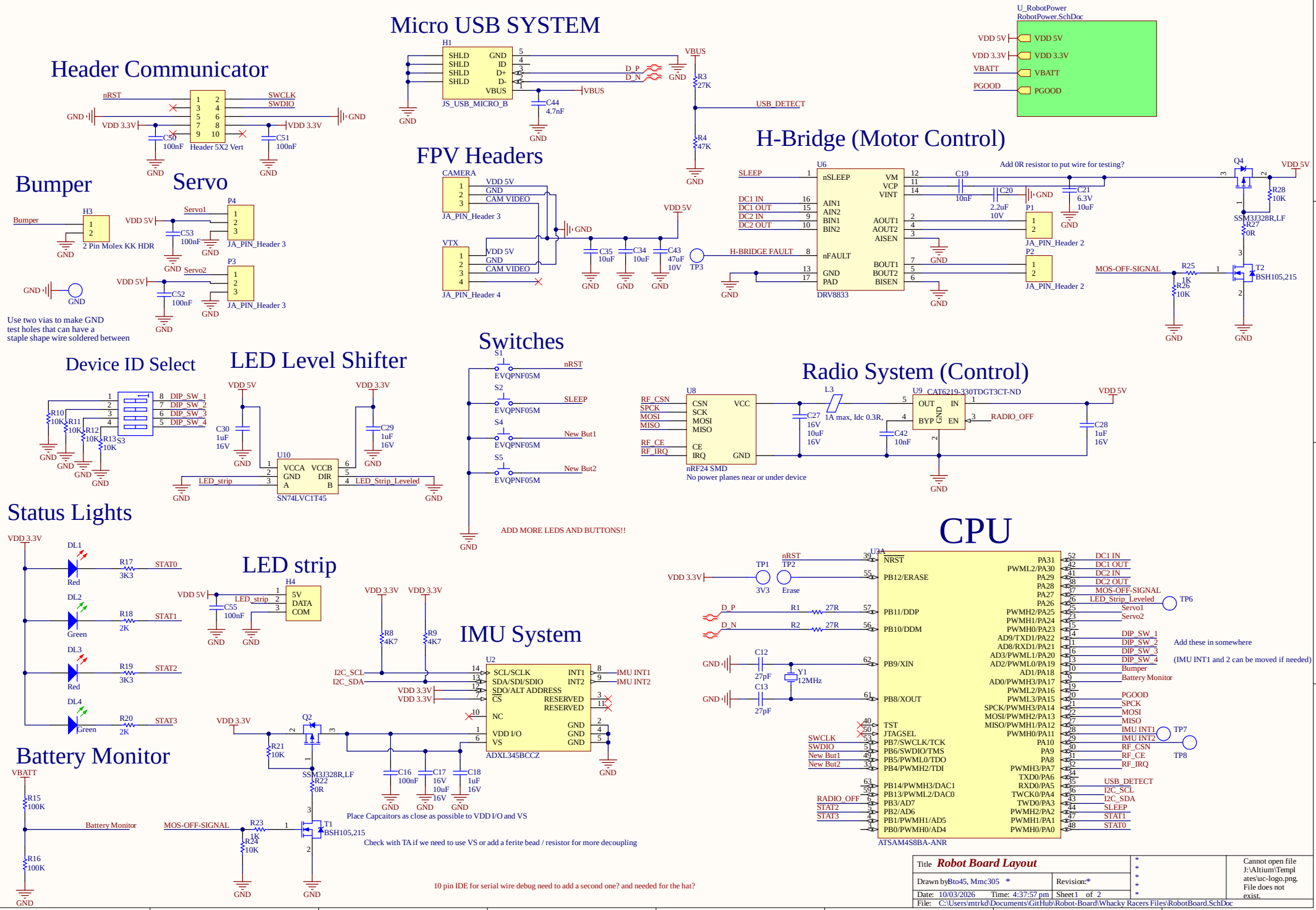
Micro USB SYSTEM
H1
JS_USB_MICRO_B
SHLD
GND
ID
D+
D-
VBUS
D_P
D_N
C44
4.7nF
R3
27K
R4
47K
USB_DETECT
U_RobotPower
RobotPower.SchDoc
VDD 5V
VDD 3.3V
VBATT
PGOOD
Header Communicator
nRST
SWCLK
SWDIO
C50
100nF
Header 5X2 Vert
C51
100nF
Bumper
H3
2 Pin Molex KK HDR
Use two vias to make GND test holes that can have a staple shape wire soldered between
Servo
P4
P3
Servo1
Servo2
C53
100nF
C52
100nF
JA_PIN_Header 3
FPV Headers
CAMERA
VTX
JA_PIN_Header 3
JA_PIN_Header 4
CAM VIDEO
C35
10uF
C34
10uF
C43
47uF
10V
TP3
H-Bridge (Motor Control)
U6
DRV8833
nSLEEP
AIN1
AIN2
BIN1
BIN2
nFAULT
PAD
VM
VCP
VINT
AOUT1
AOUT2
AISEN
BOUT1
BOUT2
BISEN
SLEEP
DC1 IN
DC1 OUT
DC2 IN
DC2 OUT
H-BRIDGE FAULT
Add 0R resistor to put wire for testing?
C19
10nF
C20
2.2uF
10V
C21
6.3V
10uF
P1
P2
JA_PIN_Header 2
Q4
SSM3J328R,LF
R28
10K
R27
0R
MOS-OFF-SIGNAL
R25
1K
R26
10K
T2
BSH105,215
Device ID Select
DIP_SW_1
DIP_SW_2
DIP_SW_3
DIP_SW_4
R10
R11
R12
R13
S3
LED Level Shifter
U10
SN74LVC1T45
VCCA
VCCB
GND
DIR
A
B
LED_strip
LED_Strip_Leveled
C30
1uF
16V
C29
1uF
16V
Switches
S1
S2
S4
S5
EVQPNF05M
nRST
SLEEP
New But1
New But2
ADD MORE LEDS AND BUTTONS!!
Radio System (Control)
U8
nRF24 SMD
No power planes near or under device
CSN
SCK
MOSI
MISO
CE
IRQ
VCC
RF_CSN
SPCK
MOSI
MISO
RF_CE
RF_IRQ
L3
1A max, Idc 0.3R,
C27
16V
10uF
16V
C42
10nF
U9 CAT6219-330TDGT3CT-ND
OUT
IN
BYP
GND
EN
RADIO_OFF
C28
1uF
16V
Status Lights
DL1
DL2
DL3
DL4
Red
Green
R17
3K3
R18
2K
R19
3K3
R20
2K
STAT0
STAT1
STAT2
STAT3
LED strip
H4
5V
DATA
COM
C55
100nF
R8
4K7
R9
4K7
IMU System
U2
ADXL345BCCZ
SCL/SCLK
SDA/SDI/SDIO
SDO/ALT ADDRESS
CS
NC
VDD I/O
VS
INT1
INT2
RESERVED
I2C_SCL
I2C_SDA
IMU INT1
IMU INT2
Q2
R21
10K
SSM3J328R,LF
R22
0R
C16
100nF
C17
16V
10uF
16V
C18
1uF
16V
Place Capcaitors as close as possible to VDD I/O and VS
Check with TA if we need to use VS or add a ferite bead / resistor for more decoupling
Battery Monitor
VBATT
R15
100K
R16
100K
R23
1K
R24
10K
T1
BSH105,215
CPU
U3A
ATSAM4S8BA-ANR
NRST
PB12/ERASE
PB11/DDP
PB10/DDM
PB9/XIN
PB8/XOUT
TST
JTAGSEL
PB7/SWCLK/TCK
PB6/SWDIO/TMS
PB5/PWML0/TDO
PB4/PWMH2/TDI
PB14/PWMH3/DAC1
PB13/PWML2/DAC0
PB3/AD7
PB2/AD6
PB1/PWMH1/AD5
PB0/PWMH0/AD4
PA31
PWML2/PA30
PA29
PA28
PA27
PA26
PWMH2/PA25
PWMH1/PA24
PWMH0/PA23
AD9/TXD1/PA22
AD8/RXD1/PA21
AD3/PWML1/PA20
AD2/PWML0/PA19
AD1/PA18
AD0/PWMH3/PA17
PWML2/PA16
PWML3/PA15
SPCK/PWMH3/PA14
MOSI/PWMH2/PA13
MISO/PWMH1/PA12
PWMH0/PA11
PA10
PA9
PA8
PWMH3/PA7
TXD0/PA6
RXD0/PA5
TWCK0/PA4
TWD0/PA3
PWMH2/PA2
PWMH1/PA1
PWMH0/PA0
TP1
3V3
TP2
Erase
R1
27R
R2
27R
C12
27pF
C13
27pF
Y1
12MHz
DC1 IN
DC1 OUT
DC2 IN
DC2 OUT
MOS-OFF-SIGNAL
LED_Strip_Leveled
Servo1
Servo2
DIP_SW_1
DIP_SW_2
DIP_SW_3
DIP_SW_4
Bumper
Battery Monitor
PGOOD
SPCK
MOSI
MISO
IMU INT1
IMU INT2
RF_CSN
RF_CE
RF_IRQ
USB_DETECT
I2C_SCL
I2C_SDA
SLEEP
STAT1
STAT0
TP6
TP7
TP8
SWCLK
SWDIO
New But1
New But2
RADIO_OFF
STAT2
STAT3
Add these in somewhere
(IMU INT1 and 2 can be moved if needed)
10 pin IDE for serial wire debug need to add a second one? and needed for the hat?
Title Robot Board Layout
Drawn by Bto45, Mmc305
Revision:*
Date: 10/03/2026
Time: 4:37:57 pm
Sheet 1 of 2
File: C:\Users\mtrkd\Documents\GitHub\Robot-Board\Whacky Racers Files\RobotBoard.SchDoc
Cannot open file J:\Altium\Templates\uc-logo.png. File does not exist.